CAMBRIDGE
INTERNATIONAL EXAMINATIONS

JUNE 2002

GCE Advanced Level

MARK SCHEME

MAXIMUM MARK : 40

SYLLABUS/COMPONENT :9701 /6

CHEMISTRY
(OPTIONS (A2))

UNIVERSITY of CAMBRIDGE
Local Examinations Syndicate

Biochemistry

1. **(a)** The three-dimensional shape / how structure folds or coils (1)

contains α-helix (1)
[2]

(b) – OH hydrogen bonding (1)
or any polar group

$-CO_2^-$ or $-NH_3^+$ ionic/electrostatic bonding (1)
[2]

if no groups identified, 2 types of bonding score (1)

(c) **(i)** Ionic / acid-base / electrostatic (1)

forms salts or complex ions e.g. $-CO_2^- Ag^+$ (1)

OR disulphide links (1)

$-CH_2 - S - Ag^+$ (1)

(ii) Heat breaks the weakest bond first (1)

van der Waals' or hydrogen bonds (1)

(iii) Addition of H^+ or OH^- breaks polar bonds / protonation - deprotonation (1)

ionic **OR** hydrogen bonds

OR $-CO_2^- + H^+ \Rightarrow -CO_2H$ (1)
[6]

2. (a)

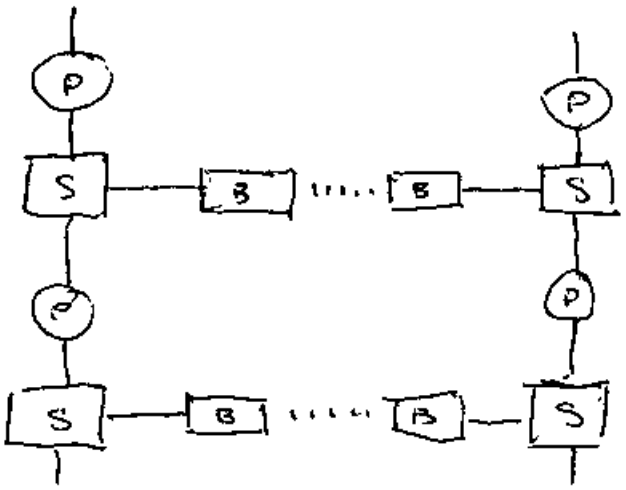

At low specific bases NOT wrong

P, S, B identified (1)

Shape (1)

AT / CG (1)

one example

H-bonds shown (1)

check in (b)

[4]

(b) DNA is the repository of genetic information (1)

It can replicate itself (1)

It contains a triplet code of bases (1)

It unwinds to give a single strand which acts as a template (1)

This forms m-RNA (1)

t-RNA translates the code into a sequence of amino acid (1)

and brings each amino acid in turn (1)

[max 6]

Environmental Chemistry

3. **(a)** SO_2 bond vibrations absorb in the IR region (1)

There is a change in dipole moment (1)

This process absorbs energy which would be re-radiated as heat back to the Earth's surface (1)

(could be on a diagram)

(b) SO_2 is easily oxidised to SO_3 (1)

This dissolves in water to form sulphate ions (1)

} allow equations

Oxidising agents include O_2, O_3, NO_2 (one only) (1)

(c) $SO_2 + H_2O \Rightarrow H_2SO_3$ <~ $H^+ + HSO_3^-$ only scores (1)

SO_2 is first oxidised to SO_3 (1)

Then this dissolves : $SO_3 + H_2O \Rightarrow H_2SO_4$ (1)

(d) Powdered coal and limestone are fluidised by forcing gas through them (1)

On burning, the SO_2 is released and reacts with the limestone (1)

$SO_2(g) + CaCO_3(s) \Rightarrow CO_2(g) + CaSO_3(s)$ (1)

[max 10]

4. **(a)** Rain water containing CO_2 attacks the limestone (1)

This forms calcium hydrogencarbonate causing the rock to dissolve (1)

Raised temperature or alkaline conditions cause HCO_3^- to precipitate as CO_3^{2-} / low $[CO_2]$ shifts eqbn to left (1)

$CaCO_3 + H_2O + CO_2 \iff Ca(HCO_3)_2$ (1)

or with Ca^{2+} ions [4]

(b) **(i)** Root respiration releases carbon dioxide

OR hydrogen ions occupy exchange sites released by the removal of nutrients by the growing plant. (1)

CO_3^{2-} reacts with H^+ ions

(ii) The calcium ions from the liming displace hydrogen ions from the exchange sites. (1)

This provides long term protection by inhibiting the subsequent retention of hydrogen ions at the exchange sites

OR by being able to release the calcium ions as carbonate to neutralise the soil solution. (1)

(iii) Prevents the development of reducing conditions in the soil (1)

Reduces the risk of ion deficiencies : by precipitation (1)

Leads to / hinders processes which result in the breakdown of clay structures (1) [6]

Low pH causes waterlogging of clay soils

Phase Equilibria

5. **(a)** **(i)**

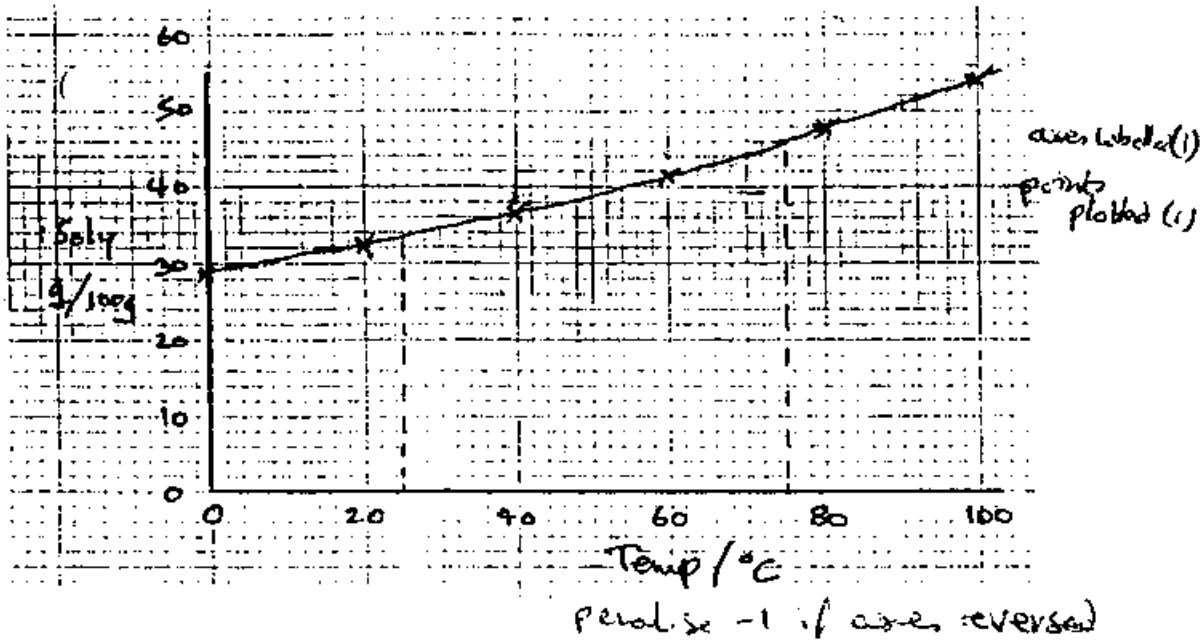

(ii) 75 °C – 45g ± 1·9 g; 25 °C – 33g ± 1g (1)

[3]

(b) **(i)** Crystallisation / crystals separate (1)

Allow solid or ppte

(ii) From **(a)(ii)** 12g of KCl separate from the solutions in 100g water (mark consequentially) (1)

[2]

(c) Mole fraction is $\frac{KCl}{H_2O} = \frac{33/74.5}{100/18}$ (1) = 0.08 (1)

[2]

Strictly should be 0·074, allow either for 2 only give part marks if 2 not scored.

(d)

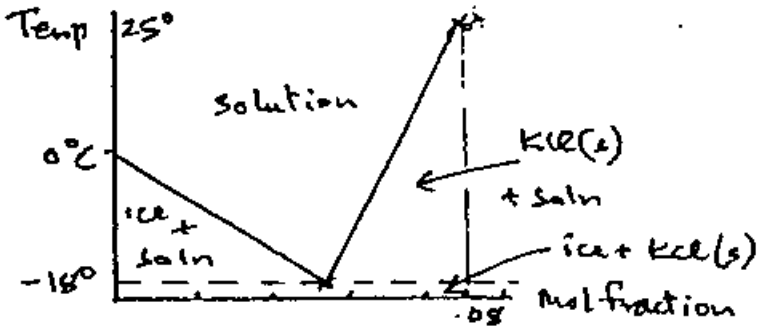

Sketch (1)

3 points (1)

Areas (1)

[3]

6. (a)

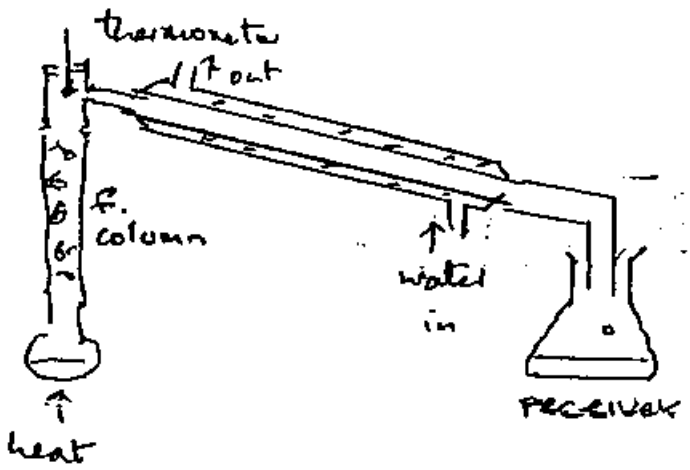

fractionating column + thermometer (1)
Direction of water flow (1)

[2]

(b)

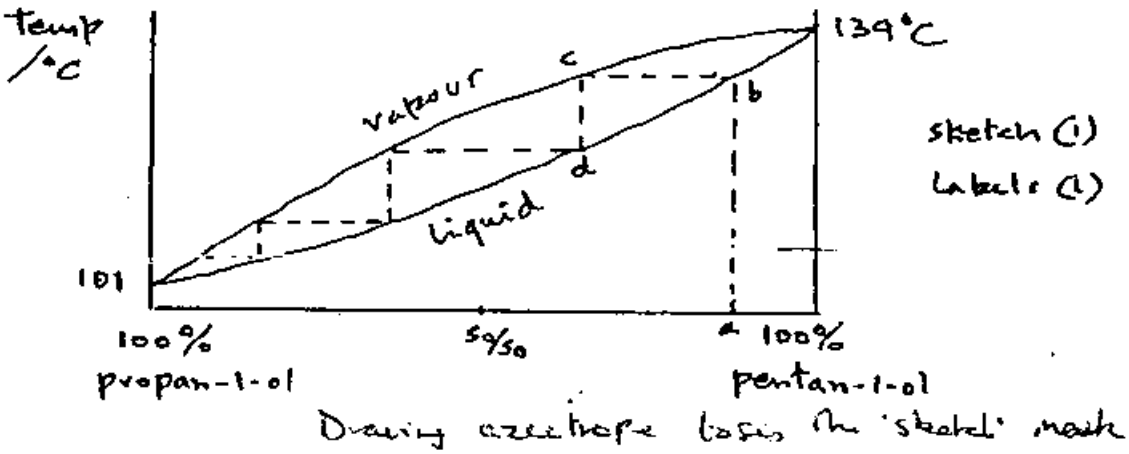

sketch (1)
labels (1)

Drawing azeotrope loses the 'sketch' mark

Liquid **(a)** boils **(b)** giving a vapour richer in the more volatile component (1)

This condenses to liquid **(d)** in the fractionating column (1)

Each horizontal line represents a 'theoretical plate' (1)
a tie line or step
[5]

(c) Propan-1-ol and water have similar intermolecular forces
OR both form hydrogen bonds (1)

The larger hydrophobic C_5H_{12} of the pentan-1-ol prevents miscibility (1)

Intermolecular forces pentan-1-ol – pentan-1-ol and water – water are stronger than pentan-1-ol – water. (1)
[3]

Spectroscopy

7. **(a)** Make a mull with hydrocarbon / Nujol (1)

Place between NaCl / KBr plates (1)

OR Grind up with KBr (1)

Compress under vacuum (1)

OR Dissolve in solvent (1)

Use double beam spectrometer with solvent blank (1)
[2 x 2]

(b) **(i)** Aspirin : -OH, C=O, C—O,  (1)

Paracetamol : -OH, C=O, C—O,  -N-H (1)

(ii) -N—H is the only difference, at 3100-3600 cm^{-1} (1)
[3]

(c) Nmr absorptions depend upon the proton environment (1)

Aspirin has , protons in 3 (4) environments (1)

Paracetamol has protons in 4 (5) environments (1)
[3] May

Aspirin → 8 protons, paracetamol 9 protons (1)

8. **(a)** **(i)** ^{13}C which gives the M+1 peak (1)

(ii) Chlorine **OR** bromine (1)

^{35}Cl and ^{37}Cl, **OR** ^{79}Br and ^{81}Br (1)
[3]

(b) Ratio M : M+1 is 100 : 4.4 (1)

No. of carbons, $n = \frac{4.4 \times 100}{100 \times 1.1} = 4$ (1)

Allow any correct logic - calculation not essential **[2]**

(c) M_r of **F** is 72, hence peak at 57 is (M – 15) loss of CH_3 (1)

Peak at 57 is $^+CH_2CH_2CHO$ allow C_3H_5O (1)

Peak at 29 is $CH_3CH_2^+$ allow C_2H_5 or CHO (1)
Do NOT insist on charge **[3]**

(d) M_r of **F** is 72, hence peak at 44 is (M – 28)

The alkene is therefore C_2H_4 (1)

Thus the peak at 44 is caused by a C_2H_4O fragment (1)

[3]

Transition Elements

9. **(a)** Ligands possess pairs of electrons / negative charge (1)

The orbitals pointing towards the ligands are higher in energy (1)
[2]

(b) **(i)** $[Ar]3d^7$ (1)

(ii) Paramagnetic, since it contains (at least) one unpaired electron (1)
allow partially filled orbitals **[2]**

(c) (i) Co : 25.2/58.9 = 0.428 => 1
N : 24/14.0 = 1.714 => 4
H : 5.1/1.0 = 5.10 => 12
Cl : 45.6/35/5 = 1.29 => 3 (1)

Empirical formula = $CoN_4H_{12}Cl_3$ (1)

Likely ligands = 4 x NH_3 and 2 x Cl (1)
From AgCl data one Cl^- is not a ligand (1)

(ii) Oxidation number of cobalt = +3 (1)

(iii) (1)

Diagram of *cis* form (1)

Diagram of *trans* form (1)
[max 6]

Names not required by structure
must be shown as 3-D.

10. (a) (i) Iron is oxidised to Fe^{2+} / Fe -- $2e^-$ => Fe^{2+} (1)

Electrons add to oxygen / $2H_2O + O_2 + 4e^- \Rightarrow 4OH^-$ (1)

The ions combine $Fe^{2+} + 2OH^- \Rightarrow Fe(OH)_2$ (1)

Further oxidation occurs / $2Fe(OH)_2 + \frac{1}{2}O_2 + H_2O \Rightarrow 2Fe(OH)_3$ (1)
to Fe^{3+}

(ii) Magnesium has a more negative $E^\ominus$ than iron

OR $E^\ominus$ (Mg) = -2.38 V (1)

So it is preferentially oxidised (1)
[6]

(b) (i) $S_2O_8^{2-} + 2I^- \Rightarrow 2SO_4^{2-} + I_2$ (1)

(ii) Fe^{3+} is a homogeneous catalyst (1)

$E^\ominus$ of +0.77 is lower than for $S_2O_8^{2-}$/ SO_4^{2-} but higher than for I_2/I^- (1)

$2I^- + 2Fe^{3+} \Rightarrow I_2 + 2Fe^{2+}$ (1)

$S_2O_8^{2-} + 2Fe^{2+} \Rightarrow 2SO_4^{2-} + 2Fe^{3+}$ (1)
[4]